Mech Masz
Szczeciński
sp. z o.o. sp.k.

FAST CLEANING

Cleaner for baking trays

CBP-1

ONE-MAN OPERATION

Mech Masz
Szczecińsk
sp. z o.o. sp.k.
+48 (52) 302 00 73
www.mech-masz.eu

shorten your working time

effective cleaning of trays

Mech Masz
Szczecinek
sp. z o.o. sp.k.
+48 (52) 302 00 73
www.mech-masz.eu

** Standard maximum size of trays up to 60 x 80 cm, it is possible to provide support for larger ones, even up to 60 x 100 cm.*

One-man operation

- Shorten the working time of your staff
- Reduce the number of operators to one person
- Keep your trays hygienic
- Clean even 4-rim baking trays of different size, optionally up to 60 x 100 cm

effective cleaning

CLEANER FOR TRAYS CBP-1

The professional cleaner for baking and confectionery trays manufactured by **MECH-MASZ** is perfectly adopted for operation with the most common tray sizes used in the industry to include *400 x 600 mm, 580 x 780 mm, 600 x 800 mm, 6000 x 1000 mm* and all intermediate versions.

Purchase of the cleaner and its regular use guarantee that your trays will be kept properly clean and in good condition. The device may work with both smooth and perforated trays made of different materials such as stainless steel, aluminium, black steel.

With the programmed number of cycles *(passages of a tray between the brushes)*, max 15, it is possible to set the operating mode of the machine for specific trays and their degree of soiling. The machine can be operated by one person, and a cleaned tray always returns to the operator.

The versatility of the device is also reflected by the fact that it is possible to use even 4-rim trays with a single rim height of up to 24 mm. Impurities accumulate underneath the cleaner on a retractable easy-empty shelf.

The device is of a fully mobile castor design. It can be effortlessly moved to the designated place when the work is done.

The entire structure undergoes shot peening, therefore its surfaces are as smooth and hygienic as possible.

Easy access to the cleaning brushes substantially facilitates care and possible supervision of the same. As many as 16 cleaning brushes, 8 per row, ensure desirable working output. In comparison with other competitive solutions, we use reinforced, additionally seized brushes which extends their lifetime and guarantees the 'bristles' are firmly held in place.

The front and rear guides are removable which provides a minimum amount of space required to store the machine, if it is not used for a longer period.

max trays
60 x 100 cm

programmed number
of cycles

durable
technical brushes

easy and safe
control

x16
brushes
in 2 rows

mobile
castor design

even 4-rim
trays

AISI 304
stainless steel

KEY FUNCTIONS

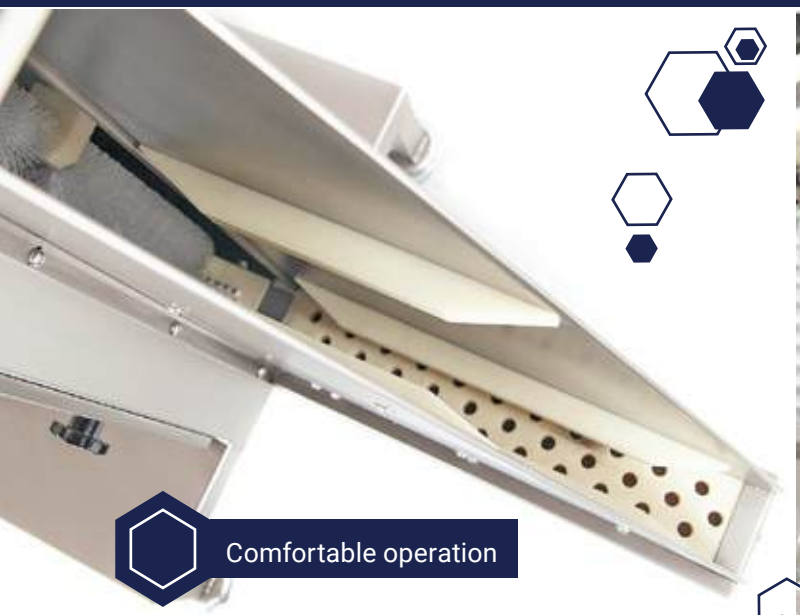

Comfortable operation

16 brushes in 2 rows

Crumble drawers / easy to clean

Durable technical brushes

Mobile design

Robust stainless structure

SPECIFIC PARAMETERS

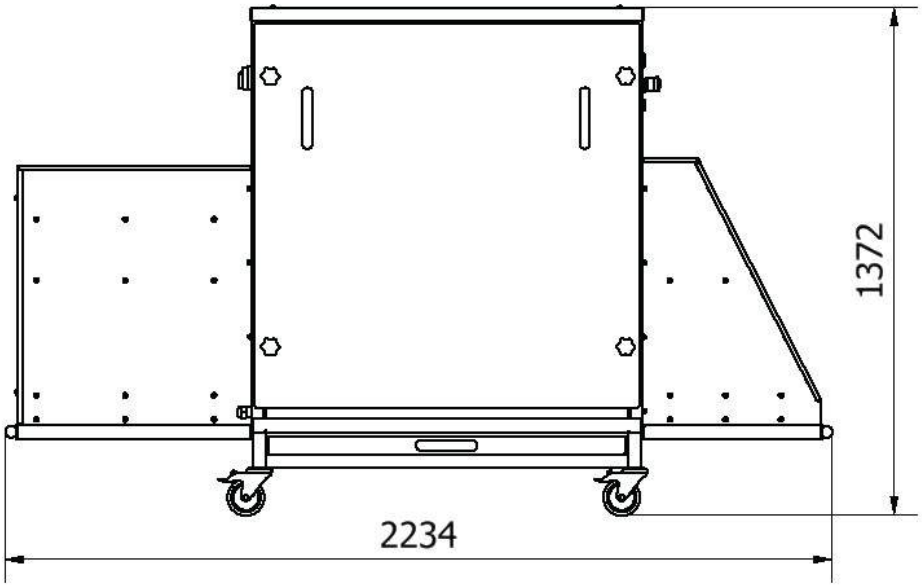

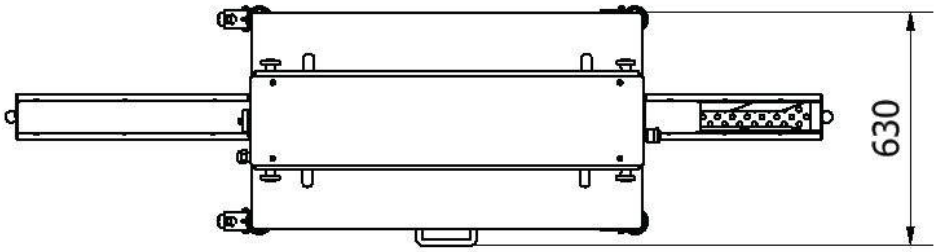

TECHNICAL DATA

Dimensions: 2234 x 630 x 1372[mm]
Power demand: 0,75 kW
Power supply: 400 Volt / 3 / 50 Hz
Control voltage: 24 Volt
Weight: 205kg
Max tray size: up to 600 x 800 x 24H [mm]
**Optional preparation for trays up to 600 x 1000 mm*

Mech Masz
Szczeciński
sp. z o.o. sp.k.

Leader in the industry

MECH-MASZ Szczeciński Sp. z o.o. Sp. k. established in 1986 is an industry leader of Polish manufacturers of bakery and confectionery machines.

For 33 years, services tailored to customer needs and perfect quality of products have been the main features making the MECH-MASZ brand stand out.

We participate in all major bakery and confectionery fairs in Poland and Europe. We organise annual meetings for bakers and confectioners, while offering our baked goods and presenting the registered office. At present, the company manufactures more than 50 models of devices, and the full range includes about 800 products.

Our products are sold to domestic market customer and exported to more than 30 countries worldwide.

TÜV NORD
TÜV NORD Polska Sp. z o.o.
PN-EN ISO 9001

Firma posiada certyfikat ISO 9001 : 2015

Mech Masz Szczeciński

You're investing in future

MECH-MASZ Szczeciński
spółka z ograniczoną odpowiedzialnością sp.k.

Jaroszewo 80
88-400 ŻNIN
POLAND

mechmasz@mech-masz.com.pl

tel.: +48 (52) 302 00 73
tel.2: +48 (52) 303 12 38
tel.3: +48 (52) 303 12 39

www.mech-masz.eu